ST-7188

Common, 8 Channels, 0Vdc and 24Vdc

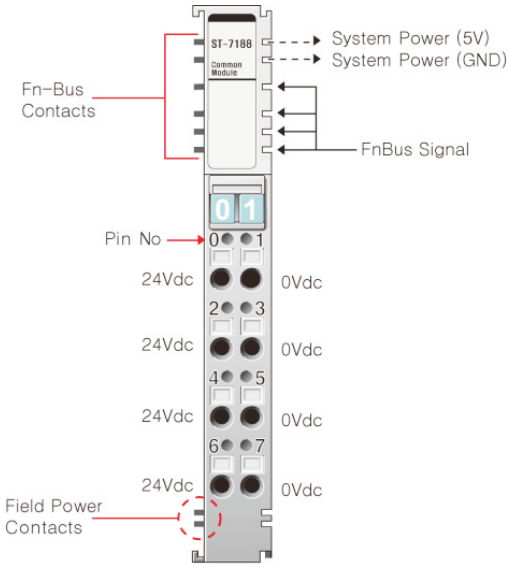

Item	ST-7188
Input Specification	
Field Power Voltage	24Vdc, 0Vdc
Contacts Current	Max. 10A
Indicators	N/A
Fn-Bus Power Contactor	Yes
Operating Temperature	-20 to +60℃
Storage Temperature	-45 to +85℃
Output Specification	
Power Dissipation	Expansion Power Distributor
Wiring	I/O Cable Max. 2.0㎟ (AWG#14)
Weight	65g Max.
Module Size	12mm x 99mm x 70mm
Environment Condition	Refer to " Environment Specification"(page : 1-191)
Pin No.	Description
0	24 Vdc
1	0 Vdc
2	24 Vdc
3	0 Vdc
4	24 Vdc
5	0 Vdc
6	24 Vdc
7	0 Vdc
-	-
-	-
-	-
-	-
-	-
-	-
-	-
-	-
-	-
-	-
-	-
-	-
-	-
-	-
-	-
-	-
-	-
-	-
-	-
-	-
-	-
-	-