Product Data Sheet 614 NHU

ebmpapst

The engineer's choice

614 NHU

INDEX

1 General ... 3

2 Mechanics ... 3

2.1 General ... 3
2.2 Connections ... 3

3 Operating Data ... 4

3.1 Electrical Operating Data ... 4
3.2 Electrical Features ... 4
3.3 Aerodynamics ... 6
3.4 Sound Data ... 8

4 Environment ... 8

4.1 General ... 8
4.2 Climatic Requirements ... 8

5 Safety ... 10

5.1 Electrical Safety ... 10
5.2 Approval Tests ... 10

6 Reliability ... 10

6.1 General ... 10

1 General

Fan type	Fan	
Rotating direction looking at rotor	Clockwise	
Airflow direction	Air outlet over struts	
Bearing system	Ball bearing	
Mounting position - shaft	Any	

2 Mechanics

2.1 General

Width	60,0 mm	
Height	60,0 mm	
Depth	25,0 mm	
Mass	0,066 kg	
Housing material	Plastic	
Impeller material	Plastic	
Max. torque when mounted across both mounting flanges Screw size	Wire outlet corner: 20 Ncm Remaining corners: 40 Ncm ISO 4762 - M3 degreased, without an additional brace and without washer	

2.2 Connections

Electrical connection	Wires	
Lead wire length Tolerance	L = 310 mm +- 10,0 mm	
Wire size (AWG)	22	
Insulation diameter	1,70 mm	

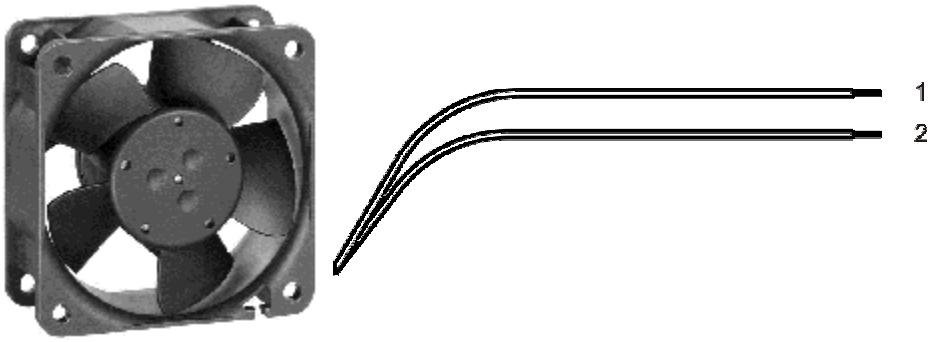

Wire	Color	Operation
1	red	+ UB
2	blue	- GND

3 Operating Data

3.1 Electrical Operating Data

Measurement conditions: Normal air density = 1,2 kg/m3; Temperature 23°C +/- 3°C; Motor axis horizontal; warm-up time before measuring 5 minutes (unless otherwise specified). In the intake and outlet area should not be any solid obstruction within 0,5 m.

$\Delta p = 0$: corresp. to free air flow (see chapter aerodynamics)
I: corresp. to arithm. mean current value

Features	Condition	Symbol	Values		
Voltage range		U	18,0 V		26,0 V
Nominal voltage		U_N		24,0 V	
Power consumption Tolerance	$\Delta p = 0$ 0010	P	1,1 W +- 17,5 %	2,1 W +- 12,5 %	2,4 W +- 17,5 %
Current consumption Tolerance	$\Delta p = 0$ 0010	I	60 mA +- 17,5 %	88 mA +- 12,5 %	91 mA +- 17,5 %
Speed Tolerance	$\Delta p = 0$ 0010	n	4.300 1/min +- 15,0 %	5.600 1/min +- 10,0 %	5.750 1/min +- 15,0 %
Starting current consumption				380 mA	

3.2 Electrical Features

Electronic function	None	
Reversed polarity protection Max. residual current at U_N	Rectifying diode I_F <= 5 uA	
Locked rotor protection	Auto restart	
Locked rotor current at U_N	I_{block} approx. 380 mA	
Clock signal at locked rotor	t_3 / t_4 typical: 0,2 s / 1,1 s	

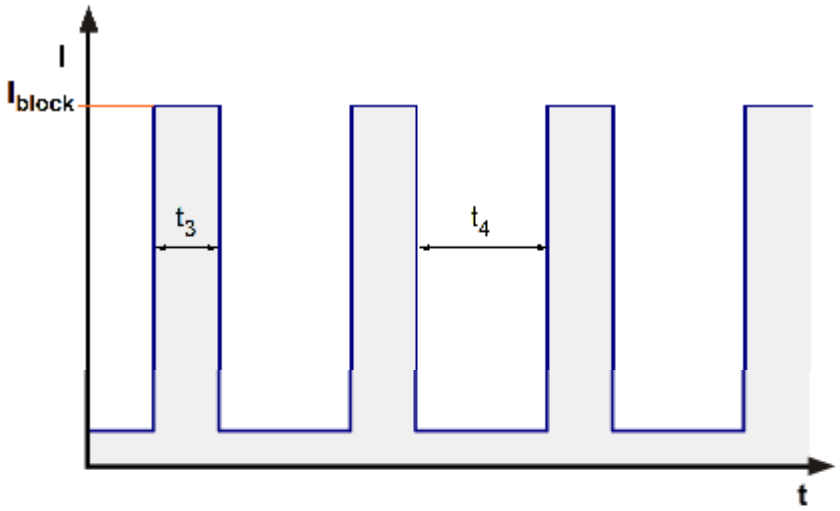
I
I block
t3
t4
t

3.3 Aerodynamics

Measurement conditions:	Measured with a double chamber intake rig acc. to DIN EN ISO 5801. Normal air density = 1,2 kg/m3; Temperature 23°C +/- 3°C; In the intake and outlet area should not be any solid obstruction within 0,5 m. Motor shaft horizontal. The information is only valid under the specified test conditions and may be changed by the installation conditions. If there are deviations from the standard test conditions, the characteristic values must be checked under the installed conditions.

a.) Operation condition:

5.600 1/min at free air flow

Max. free-air flow (Δp = 0 / $\dot{V}$ = max.)	43,0 m3/h	
Max. static pressure (Δp = max. / $\dot{V}$ =0)	90 Pa	

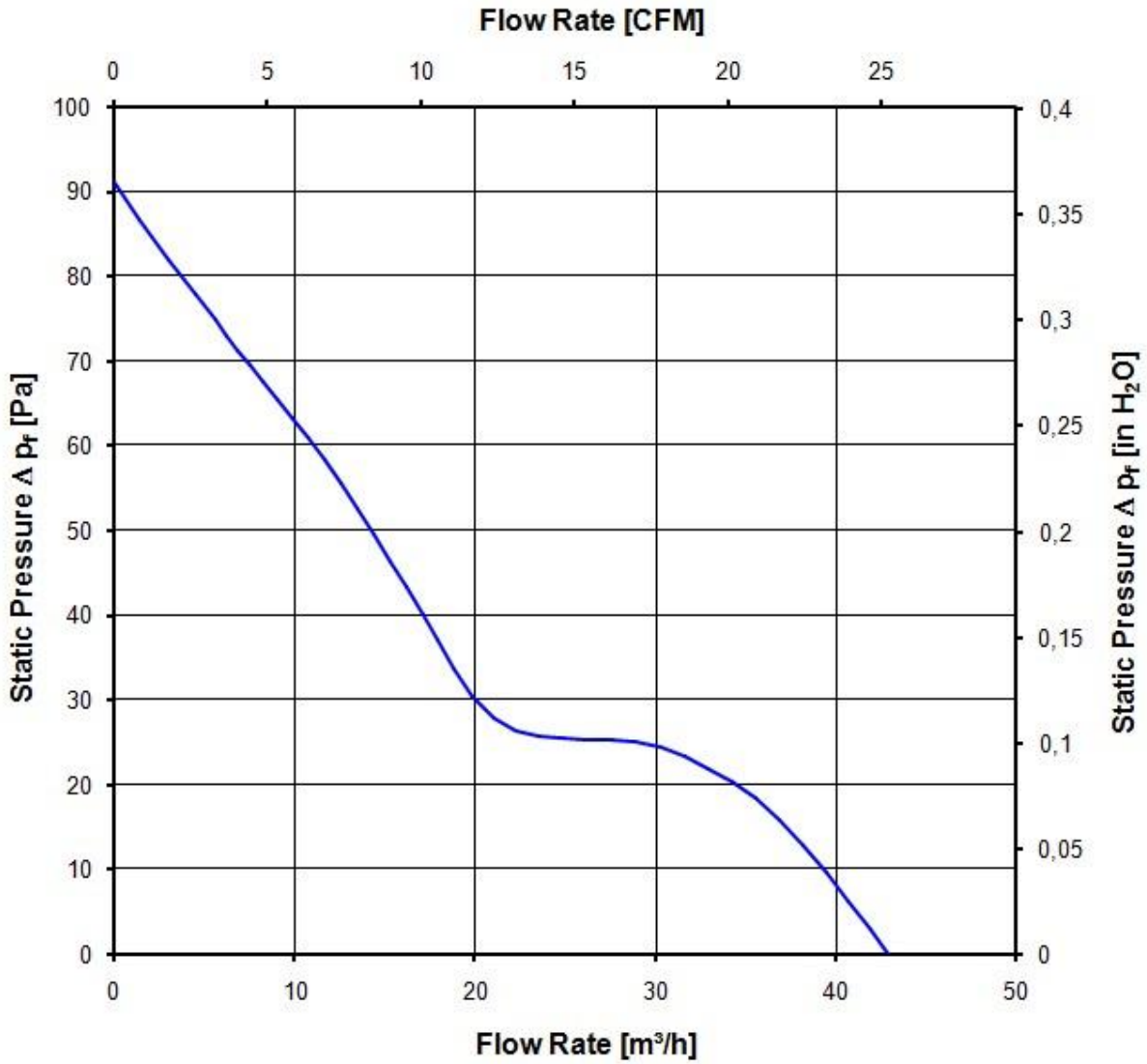

3.4 Sound Data

Measurement conditions:	Sound pressure level: 1 meter distance between microphone and the air intake. Sound power level: Acc. to DIN 45635 part 38 (ISO 10302) Measured in a semianchoic chamber with a background noise level of Lp(A) < 5 dB(A) For further measurement conditions see chapter aerodynamics.

a.) Operation condition:

5.600 1/min at free air flow

Optimal operating point	32,0 m3/h @ 20 Pa	
Sound power level at the optimal operating point	5,2 bel(A)	
Sound pressure level at free air flow, measured in rubber bands	37,0 dB(A)	

4 Environment

4.1 General

Min. permitted ambient temperature TU min.	-20 °C	
Max. permitted ambient temperature TU max.	70 °C	
Min. permitted storage temperature TL min.	-40 °C	
Max. permitted storage temperature TL max.	80 °C	

4.2 Climatic Requirements

IP-protection type (certified)	IP 68 (for fan only, not for connector if applicable) **)	
Humidity requirements	humid temperature, cyclic; according to DIN EN 60068-2-38, 10 cycle and condensation water check; according to DIN EN ISO 6270-2, 14 days	
Salt fog requirements	None	

Permitted application area:
The product is for the use in partial sheltered rooms or open, roofed areas. Direct exposure to water is allowed provided that this does not prevent the normal operation. Saline ambient conditions must be avoided.

Pollution degree 3 (according DIN EN 60664-1)
It occurs conductive pollution or dry non-conductive pollution which becomes conductive due to condensation.

**) The specification of the IP protection refers to the conditions mentioned in certification of the fan. The above mentioned short description of the protection scope is not final. For detailed information of the respective protection scope and definitions, see certification as well as DIN EN 60529 (protection by housings) and ISO 20653 (for vehicles) with the letter K.

Short description of the IP-protection type:
Solid particle Protection: Dust tight.
Protection against deliberate contact: Protected against contact to hazardous parts with a wire.
Protection against water: The fan test according to IP68 (Based on IEC 60529), is conducted in non-operating mode. The fan is tested by a complete immersion in water for a period of 2h at a water-level of 1,2m. Electrical connections are not immersed since they are customer specific.

Please require severity levels and specification parameters from the responsible development departments.

5 Safety

5.1 Electrical Safety

Dielectric strength DIN EN 60950 (VDE 0805) and DIN EN 60335 (VDE 0700) A.) Type test Measuring conditions: After 48h of storage at 95% R.H. and 25°C. No arcing or breakdown is allowed! All connections together to ground. B.) Routine test Measuring conditions: At indoor climate. No arcing or breakdown is allowed! All connections together to ground.	 Not applicable Not applicable	
Isolation resistance Measuring conditions: After 48h of storage at 95% R.H. and 25°C measured with U=500 VDC for 1 min.	RI > 10 MOhm	
Clearance / creepage distance	1,0 mm / 1,2 mm	
Protection class	III	

5.2 Approval Tests

CE	EC Declaration of Conformity	Yes
EAC	Eurasian Conformity	Yes
UL	Underwriters Laboratories	Yes / UL507, Electric Fans
VDE	Association for Electrical, Electronic and Information Technologies	Yes / Approval acc. to EN 60950 (VDE 0805) - Information technology equipment
CSA	Canadian Standards Association	Yes / C22.2 No. 113 Fans and Ventilators
CCC	China Compulsory Certification	Not applicable

<u>The approval tests are observed to:</u>
U approval max.:28,0 V @ TU approval max.: 70,0 °C

6 Reliability

6.1 General

Life expectancy L10 at TU = 40 °C	70.000 h	
Life expectancy L10 at TU = 60 °C	44.000 h	
Life expectancy L10 at TU max.	35.000 h	
Life expectancy L10 acc. to IPC 9591 at TU = 40 °C	117.500 h	

Copying of this document, and giving it to others and the use or communication of the contents thereof, are forbidden without express authority. Offenders are liable to the payment of damages. All rights are reserved in the event of the grant of a patent or the registration of a utility model or design.

Schutzvermerk nach DIN ISO 16016 beachten/
Refer to protection notice DIN ISO 16016!

Anzahl und Länge der Litze s. Spezifikation
length and number of wires see design specification

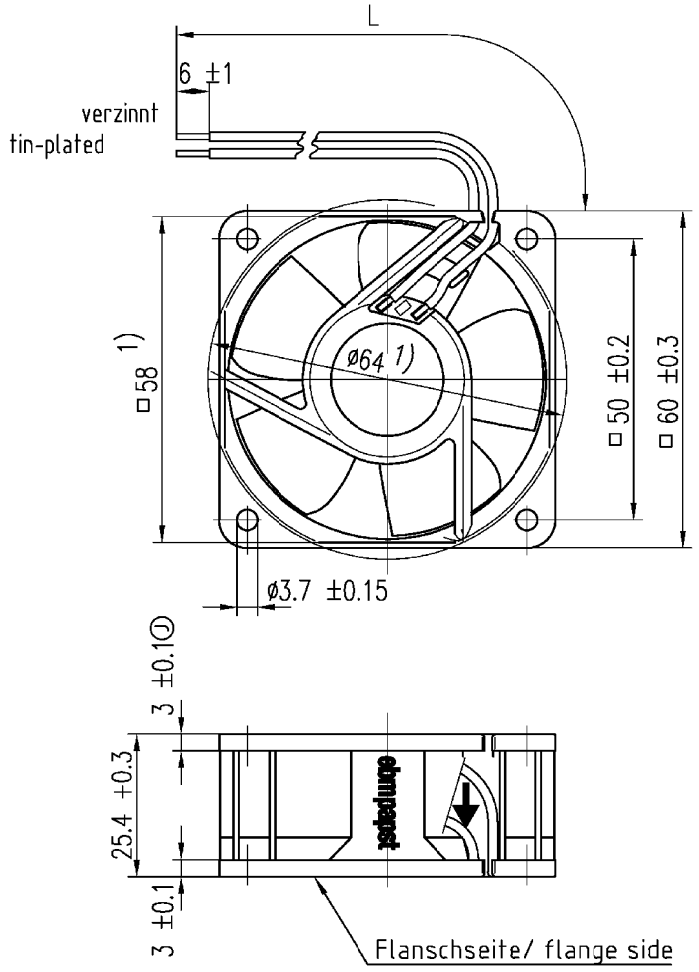

1) Maße für Montagewand
1) dimensions for assembly wall

J

			ebmpapst	Werkstoff/Material:	Volumen/Volume (mm³):
SAP-Status/State	Aend.-Nr./Change-No.	AutoCAD-System-Version	CAD-Umgebung/ CAD-Enviroment		Gewicht/Mass (g):
		Datum/Date	Name/Name		
		Bearb./ Drawn		Artikel/Title	
Tolerierung/Tolerances:		Gepr./ Checked			
		Freig./ Releas.			
Allgemeintoleranzen/Gen. tolerances:		ebmpapst		Zchg.-Nr./ Drawing.-No.:	Ers.f.Zchg./ Replaces:
		ebm-papst St. Georgen GmbH & Co. KG		Dokumenttyp/Type of Document / Teildokument (Blatt/Page) / Index/Index	Format/Size: / Massstab/scale

11/09