Changes for the Better

MITSUBISHI ELECTRIC

General-Purpose AC Servo
MELSERVO-J3

New Product Release

SV0905-1E

Servo Motor < HF-JP Series (11 to 15kW) >

New low inertia and large capacity (11kW to 15kW) servo motor has been added to MELSERVO-J3 Series compatible HF-JP motor lines. The HF-JP series is a high-speed servo motor having a rated speed of 1500r/min and maximum speed of 3000r/min.
The HF-JP series is equipped with a high-resolution absolute encoder with 262144p/rev as standard specification.
As compared to the previous model HA-LP series, HF-JP has achieved a reduction in mass and volume (up to 46% in volume and 34% in mass). The HF-JP series has realized less wiring and a higher IP code (from IP44 to IP67) by replacing the power supply terminal box with a connector and by removing the cooling fan.
The HF-JP series is well suited for “high-throughput positioning” and “high acceleration/deceleration”, due to the use of internal permanent magnets, which strengthen the rotor structure and allow for higher velocities (increased from 2000r/min to 3000r/min).
Thus, this servo motor particularly is suitable for injection molding machines and large press machines.
The HF-JP series will be compatible with global standards (EN, UL and c-UL standards).

■ Model configurations

● Servo motor

HF-JP 11K 1M 4 B K

Symbol	Motor series
HF-JP	Low inertia, large capacity

Symbol	Rated output (kW)
11K	11
15K	15

Symbol	Rated speed (r/min)
1M	1500

Symbol	Voltage class
None	200VAC
4	400VAC

Symbol	Electromagnetic brake
None	None
B	Installed

Symbol	Shaft end
None	Standard (Straight shaft)
K	Key way

✱ Use dedicated servo amplifier MR-J3□A(4)/B(4)/T(4)-LR/-LW for HF-JP series servo motor with 11kW and 15kW. HF-JP series with 11kW and 15kW cannot be used with any other servo amplifier without “-LR/-LW”.

● Servo amplifier

MR-J3- 11K A 4 - LR

Mitsubishi general-purpose AC servo amplifier MELSERVO-J3 Series

A: General-purpose interface
B: SSCNETⅢ compatible
T: CC-Link compatible built-in positioning function

Symbol	Compatible motors
11K	HF-JP11K1M(B), HF-JP11K1M4(B)
15K	HF-JP15K1M(B), HF-JP15K1M4(B)

Symbol	Power supply
None	3-phase 200VAC
4	3-phase 400VAC

Symbol	Special specification	
LR	Dedicated servo amplifier for HF-JP servo motor with 11kW and 15kW	With an enclosed regenerative resistor
LW		Without an enclosed regenerative resistor

■ Servo motor specifications

Servo motor series			HF-JP1500r/min series (low inertia, large capacity)			
			200VAC		400VAC	
Servo motor model			HF-JP11K1M(B)	HF-JP15K1M(B)	HF-JP11K1M4(B)	HF-JP15K1M4(B)
Compatible servo amplifier model			MR-J3-11KA/B/T-LR	MR-J3-15KA/B/T-LR	MR-J3-11KA4/B4/T4-LR	MR-J3-15KA4/B4/T4-LR
Power supply capacity (Note 1)		(kVA)	16	22	16	22
Continuous running duty	Rated output	(kW)	11	15	11	15
	Rated torque	(N·m [oz·in])	70 (9910)	95.5 (13500)	70 (9910)	95.5 (13500)
Maximum torque		(N·m [oz·in])	210 (29700)	286 (40500)	210 (29700)	286 (40500)
Rated speed		(r/min)	1500			
Maximum speed		(r/min)	3000			
Permissible instantaneous speed		(r/min)	3450			
Power rate at continuous rated torque		(kW/s)	223 (204)	290 (271)	223 (204)	290 (271)
Rated current		(A)	60	76	32	38
Maximum current		(A)	200	246	100	123
Regenerative braking frequency (Note 2, 3)		(times/min)	143	162	143	162
Moment of inertia J ($X10^{-4}$kg·m^2) [J (oz·in^2)]	Standard		220 (1200)	315 (1720)	220 (1200)	315 (1720)
	With electromagnetic brake		240 (1310)	336 (1840)	240 (1310)	336 (1840)
Recommended load to motor inertia moment ratio			Maximum of 10 times the servo motor's inertia moment (Note 4)			
Speed/position detector			18-bit encoder (Resolution per encoder/servo motor rotation: 262144 p/rev)			
Attachments			Oil seal			
Insulation class			Class F			
Structure			Totally enclosed non-ventilated (IP code: IP67) (Note 5)			
Environment (Note 7)	Ambient temperature		0 to 40°C (32 to 104°F) (non freezing), storage: -15 to 70°C (5 to 158°F) (non freezing)			
	Ambient humidity		80% RH maximum (non condensing), storage: 90% RH maximum (non condensing)			
	Atmosphere		Indoors (no direct sunlight); no corrosive gas, inflammable gas, oil mist or dust			
	Elevation		1000m or less above sea level			
	Vibration (Note 6)		X: 24.5m/s^2 Y: 24.5m/s^2			
Mass (kg [lb])	Standard		62 (140)	86 (190)	62 (140)	86 (190)
	With electromagnetic brake		74 (165)	97 (215)	74 (165)	97 (215)

Notes:
1. The power supply capacity varies depending on the power supply's impedance.
2. The regenerative braking frequency shows the permissible frequency when the motor decelerates from the rated speed to a stop. The value applies when external regenerative resistors, GRZG400-□Ω, (standard accessory for MR-J3-□A(4)/B(4)/T(4)-LR) are used with cooling fans (2 units of 92 X 92mm, minimum air flow: 1.0m^3/min). Note that change in parameter No. PA02 is required.
3. Use dedicated regenerative resistors for MR-J3-11KA(4)/B(4)/T(4)-LR and MR-J3-15KA(4)/B(4)/T(4)-LR. Refer to the section "Options ● Optional regeneration unit" in this New Product Release for details.
4. Contact Mitsubishi if the load to motor inertia moment ratio exceeds the value in the table.
5. The shaft-through portion is excluded.
6. The vibration direction is shown in the diagram to the right. The numeric value indicates the maximum value of the component (commonly the bracket in the opposite direction of the motor shaft). Fretting of the bearing occurs easily when the motor stops, so maintain vibration to approximately one-half of the allowable value.

7. In the environment where the servo motor is exposed to oil mist, oil and/or water, a standard specification servo motor may not be usable. Contact Mitsubishi for more details.

■ Servo motor torque characteristics

●HF-JP11K1M(B) (Note 1)

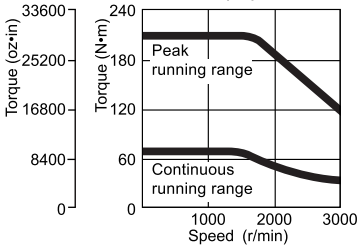

●HF-JP15K1M(B) (Note 1)

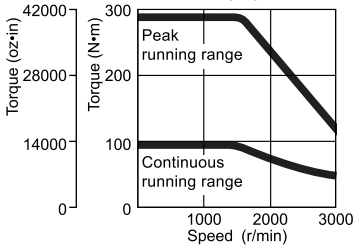

●HF-JP11K1M4(B) (Note 2, 3)

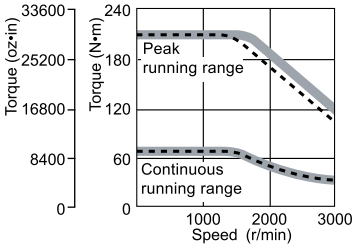

●HF-JP15K1M4(B) (Note 2, 3)

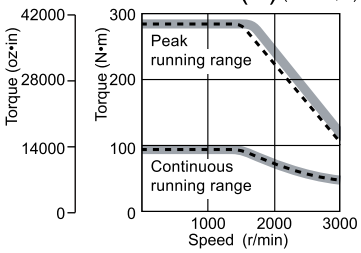

Notes:
1. ▬ : For 3-phase 200VAC.
2. ▬ : For 3-phase 400VAC.
3. - - - - : For 3-phase 380VAC.

■ Servo motor dimensions

(Unit: mm)

● HF-JP11K1M(B), HF-JP15K1M(B), HF-JP11K1M4(B), HF-JP15K1M4(B)

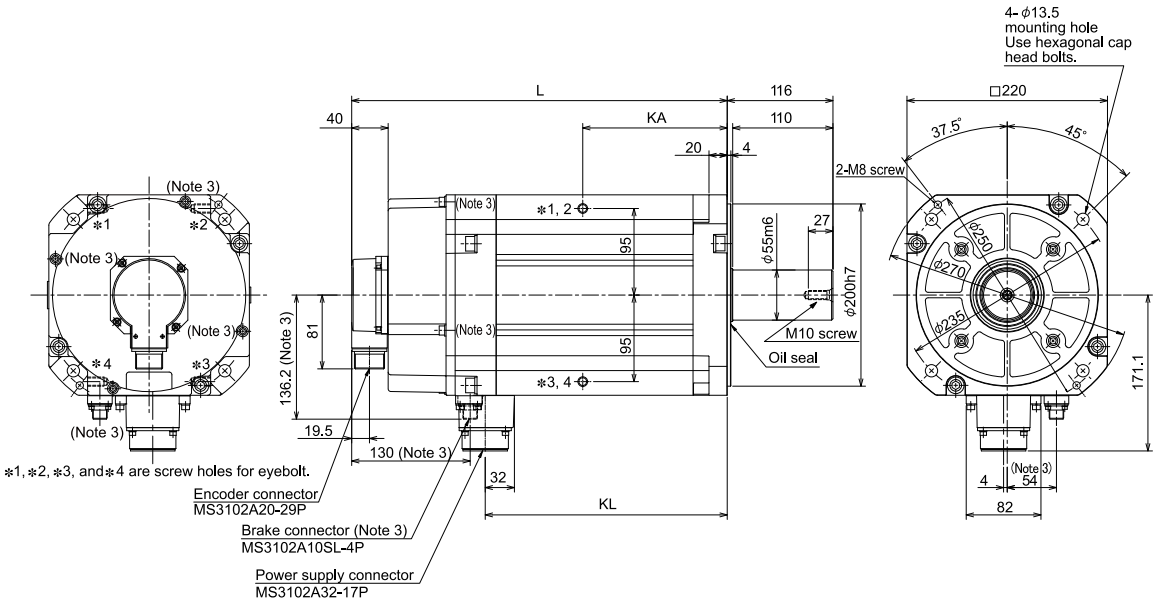

Model	Variable dimensions		
	L	KL	KA
HF-JP11K1M(B) HF-JP11K1M4(B)	339.5 (412)	265.5	158.5
HF-JP15K1M(B) HF-JP15K1M4(B)	439.5 (512)	365.5	208.5

Model	Brake static friction torque (N • m[oz • in])
HF-JP11K1MB HF-JP11K1M4B HF-JP15K1MB HF-JP15K1M4B	126 (17800)

Notes:
1. Use a friction coupling to fasten a load.
2. Dimensions inside ( ) are for the models with an electromagnetic brake.
3. Only for the models with an electromagnetic brake. The electromagnetic brake terminals do not have polarity.
4. For dimensions where there is no tolerance listed, use general tolerance.

■ Options

● Cables and connectors

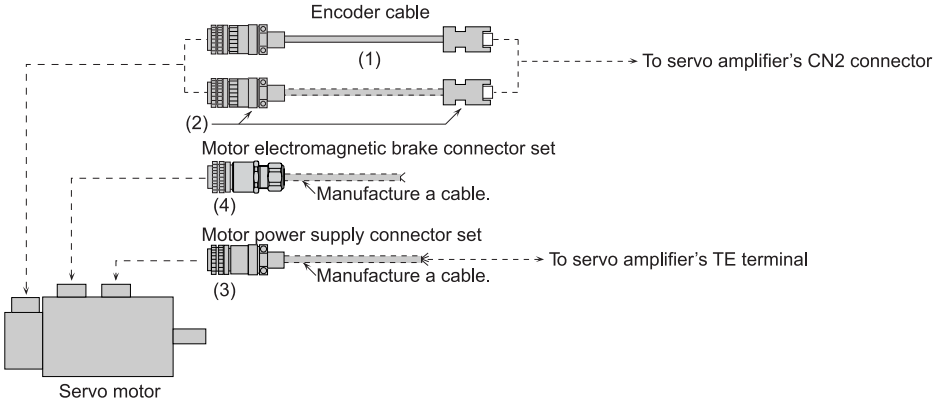

Item			Model	IP code (Note 2)	Description
For Encoder	(1)	Encoder cable	MR-ENECBL□M-H (Note 1) □=cable length: 2, 5, 10, 20, 30, 40, 50m	IP67	Amplifier connector 36210-0100PL (receptacle, 3M) 36310-3200-008 (shell kit, 3M), or 54599-1019 (connector set, Molex) Encoder connector (DDK) D/MS3106A20-29S(D190) (plug) CE02-20BS-S-D (backshell) (straight) CE3057-12A-3-D (cable clamp)
For Encoder	(2)	Encoder connector set	MR-ENECNS	IP67	Amplifier connector 36210-0100PL (receptacle, 3M) 36310-3200-008 (shell kit, 3M), or 54599-1019 (connector set, Molex) Encoder connector (DDK) D/MS3106A20-29S(D190) (plug) CE02-20BS-S-D (backshell) (straight) CE3057-12A-3-D (cable clamp)
For motor power supply	(3)	Power supply connector set	MR-PWCNS3 (Straight type)	IP67	Motor power supply connector (DDK) CE05-6A32-17SD-D-BSS (plug) (straight) CE3057-20A-1-D (cable clamp) <Applicable cable example> Wire size: 14mm^2 (AWG6) to 22mm^2 (AWG4) Completed cable outer diameter: ϕ22 to 23.8mm
For motor electromagnetic brake	(4)	Brake connector set	MR-BKCN (Straight type)	IP67	Motor brake connector D/MS3106A10SL-4S(D190) (plug, DDK) YSO10-5 to 8 (cable clamp (straight), Daiwa Dengyo) <Applicable cable example> Wire size: 0.3mm^2 (AWG22) to 1.25mm^2 (AWG16) Completed cable outer diameter: ϕ5 to 8.3mm

Notes: 1. -H and -L indicate bending life. -H indicates long bending life, and -L indicates standard bending life.
2. The IP code indicated is for the connector's protection against ingress of dust and water when coupled to a servo amplifier/servo motor. If the IP code of the servo amplifier/servo motor differs from that of these connectors, overall IP code depends on the lowest of all.

■ Ordering information for customers

To order the following products, contact the relevant manufacturers directly.

● Encoder connectors

Item	Plug	Backshell		Cable clamp	IP code (Note 2)	Description	Applicable cable example	
		Type	Model	Model			Wire size	Completed cable outer diameter
Motor encoder connector	D/MS3106A20-29S(D190)	Straight	CE02-20BS-S-D	CE3057-12A-3-D	IP67 EN standards	<Straight type> 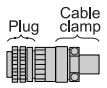 Manufacturer: DDK Ltd. <Angled type> 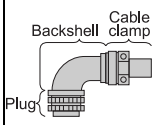 Manufacturer: DDK Ltd.	0.3mm^2 (AWG22) to 1.25mm^2 (AWG16)	ø6.8 to 10mm
		Angled	CE-20BA-S-D					

Item	Plug (with backshell)		Cable clamp	IP code (Note 2)	Description	Applicable cable example	
	Type	Model	Model			Wire size	Completed cable outer diameter
Motor encoder connector	Straight	D/MS3106B20-29S	D/MS3057-12A	General environment (Note 1)	<Straight type> 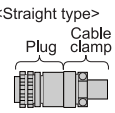 Manufacturer: DDK Ltd. <Angled type> 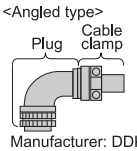 Manufacturer: DDK Ltd.	0.3mm^2 (AWG22) to 1.25mm^2 (AWG16)	ø15.9mm or smaller (Inner diameter of bushing)
	Angled	D/MS3108B20-29S					

Item	Model	Description
Amplifier CN2 connector (Note 3)	54599-1019 (connector set)	 Manufacturer: Molex

● Motor power supply connectors

Item	Plug (with backshell)		Cable clamp	IP code (Note 2)	Description	Applicable cable example	
	Type	Model	Model			Wire size	Completed cable outer diameter
Motor power supply connector	Straight	CE05-6A32-17SD-D-BSS	CE3057-20A-1-D	IP67 EN standards	<Straight type> 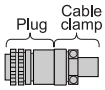 Manufacturer: DDK Ltd. <Angled type> 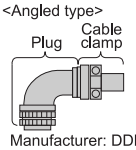 Manufacturer: DDK Ltd.	14mm^2 (AWG6) to 22mm^2 (AWG4)	ø22 to 23.8mm
	Angled	CE05-8A32-17SD-D-BAS	CE3057-20A-1-D				
	Straight	D/MS3106B32-17S	D/MS3057-20A	General environment (Note 1)			ø23.8mm or smaller (Inner diameter of bushing)
	Angled	D/MS3108B32-17S	D/MS3057-20A				

Notes: 1. Not compliant with EN standards.
2. The IP code indicated is for the connector's protection against ingress of dust and water when coupled to a servo amplifier/servo motor. If the IP code of the servo amplifier/servo motor differs from that of these connectors, overall IP code depends on the lowest of all.
3. 3M also manufactures a connector compatible with the amplifier's CN2 connector. Model: 36210-0100PL (receptacle), 36310-3200-008 (shell kit).

■ Ordering information for customers

To order the following products, contact the relevant manufacturers directly.

● Motor electromagnetic brake connector

Item	Plug	Cable clamp (with backshell)			IP code (Note 2)	Description	Applicable cable example	
	Type	Type	Model	Manufacturer			Wire size	Completed cable outer diameter
Motor brake connector	D/MS3106A10SL-4S(D190) Manufacturer: DDK Ltd.	Straight	ACS-08RL-MS10F	NIPPON FLEX CO., LTD.	IP67	<Straight type> Plug Cable clamp 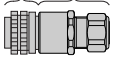	0.3mm^2 (AWG22) to 1.25mm^2 (AWG16)	ø4 to 8mm
			ACS-12RL-MS10F					ø8 to 12mm
			YSO10-5 to 8	DAIWA DENGYO CO., LTD.				ø5 to 8.3mm
		Angled	ACA-08RL-MS10F	NIPPON FLEX CO., LTD.		<Angled type> Cable clamp 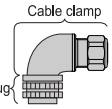 Plug		ø4 to 8mm
			ACA-12RL-MS10F					ø8 to 12mm
			YLO10-5 to 8	DAIWA DENGYO CO., LTD.				ø5 to 8.3mm

Item	Plug (with backshell)		Cable clamp	IP code (Note 2)	Description	Applicable cable example	
	Type	Model	Model			Wire size	Completed cable outer diameter
Motor brake connector	Straight	D/MS3106A10SL-4S	D/MS3057-4A	General environment (Note 1)	<Straight type> Plug Cable clamp 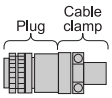 Manufacturer: DDK Ltd.	0.3mm^2 (AWG22) to 1.25mm^2 (AWG16)	ø5.6mm or smaller (Inner diameter of bushing)

Notes: 1. Not compliant with EN standards.
2. The IP code indicated is for the connector's protection against ingress of dust and water when coupled to a servo amplifier/servo motor. If the IP code of the servo amplifier/servo motor differs from that of these connectors, overall IP code depends on the lowest of all.

■ Options

● Optional regeneration unit

The power values in this table are resistor-generated powers, not rated powers.

Applicable servo amplifier model	Tolerable regenerative power (W) of standard accessory (external regenerative resistor) (Note 1)				Tolerable regenerative power (W) of optional regeneration unit (Note 1)			
	GRZG400-0.8Ω×4	GRZG400-0.6Ω×5	GRZG400-2.5Ω×4	GRZG400-2Ω×5	MR-RB5R [3.2Ω]	MR-RB9F [3Ω]	MR-RB5K-4 [10Ω]	MR-RB6K-4 [10Ω]
MR-J3-11KA/B/T-LR	500 (800)	-	-	-	500 (800)	-	-	-
MR-J3-15KA/B/T-LR	-	850 (1300)	-	-	-	850 (1300)	-	-
MR-J3-11KA4/B4/T4-LR	-	-	500 (800)	-	-	-	500 (800)	-
MR-J3-15KA4/B4/T4-LR	-	-	-	850 (1300)	-	-	-	850 (1300)

Notes: 1. The values in ( ) indicate when cooling fans (2 units of 92 X 92mm, minimum air flow: 1.0m^3/min) are installed, and parameter No. PA02 is changed.

✱ Cautions when connecting the optional regeneration unit.

1. The optional regeneration unit causes a temperature rise of 100°C or more relative to the ambient temperature. Fully examine heat dissipation, installation position, wires used, etc. before installing the unit. Use flame-resistant wires or apply flame retardant on wires. Keep the wires clear of the unit.
2. Always use twisted wires, maximum length of 5m, to connect the optional regeneration unit with the servo amplifier.
3. Always use twisted wires for a thermal sensor, and make sure that the sensor does not fail to work properly due to inducted noise.

■ Options

● Optional regeneration unit

External dimensions (Unit: mm)

● GRZG400-0.8Ω, GRZG400-0.6Ω (200VAC): Standard accessory (Note 1, 2)
● GRZG400-2.5Ω, GRZG400-2.0Ω (400VAC): Standard accessory (Note 1, 2)

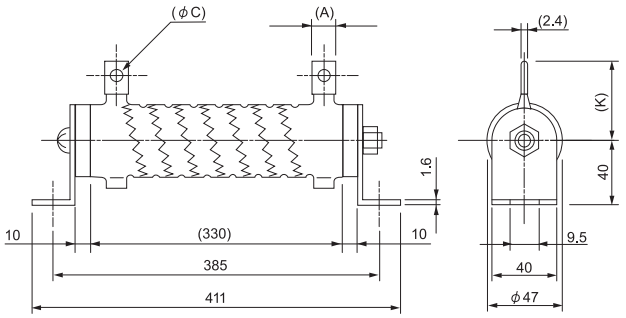

Mounting screw size: M8

Model	Qty.	Tolerable regenerative power (W)	With cooling fan (W)	Resistance value (Ω)	Variable dimensions A	C	K	Mass/unit kg (lb)
GRZG400-0.8Ω	4	500	800	3.2 (0.8Ω×4)	10	5.5	39	0.8 (1.8)
GRZG400-0.6Ω	5	850	1300	3 (0.6Ω×5)	16	8.2	46	
GRZG400-2.5Ω	4	500	800	10 (2.5Ω×4)	10	5.5	39	
GRZG400-2Ω	5	850	1300	10 (2Ω×5)				

Connections

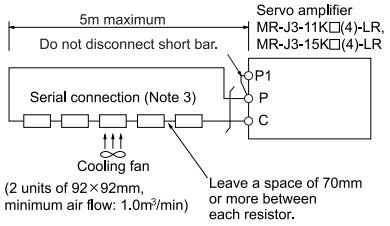

● MR-RB5R, MR-RB9F (200VAC) (Note 2)
● MR-RB5K-4, MR-RB6K-4 (400VAC) (Note 2)

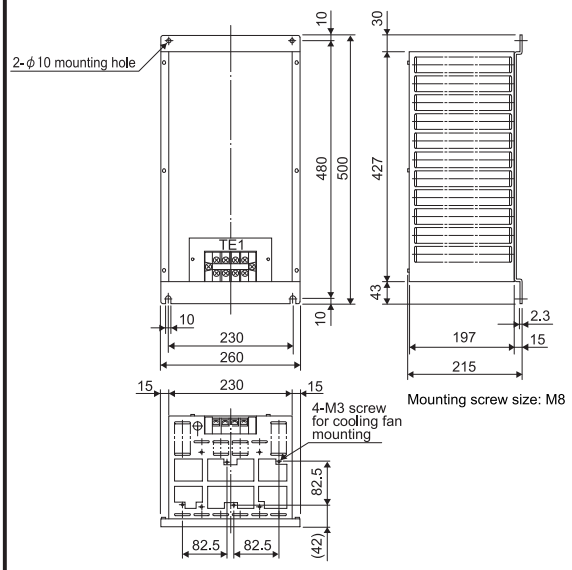

Mounting screw size: M8

<Terminal arrangement>

TE1	G4	G3	C	P

Terminal screw size: M5

Model	Tolerable regenerative power (W)	With cooling fan (W)	Description	Mass/unit kg (lb)
MR-RB5R	500	800	GRZG400-0.8Ω×4	10 (22)
MR-RB9F	850	1300	GRZG400-0.6Ω×5	11 (24)
MR-RB5K-4	500	800	GRZG400-2.5Ω×4	10 (22)
MR-RB6K-4	850	1300	GRZG400-2Ω×5	11 (24)

Connections

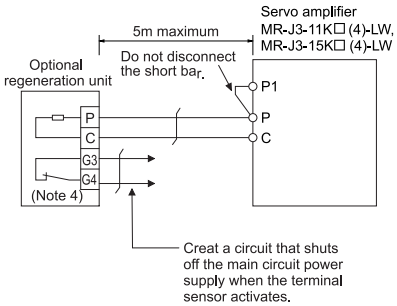

Notes:
1. Servo amplifiers (MR-J3-11K□(4)-LW and MR-J3-15K□(4)-LW), without an enclosed regenerative resistor, are also available.
2. To increase the regeneration braking frequency, install cooling fans (2 units of 92 X 92mm, minimum air flow: 1.0m³/min) and change parameter No. PA02. The cooling fans must be prepared by user.
3. By installing a thermal sensor, create a safety circuit that shuts off the main circuit power supply when abnormal overheating occurs.
4. The G3 and G4 terminals are thermal sensor. G3-G4 opens when the regenerative unit overheats abnormally.

■ MEMO